Product Information

71 72 460

Bolt Cutter

- Cutting capacity up to 48 HRC hardness
- Robust cutting edges are additionally induction-hardened, cutting edge hardness approx. 62 HRC
- Forged-in stopper with comfortable shock-absorber
- Good access due to very flat construction of head and joint area
- Ergonomically angled handles to minimise effort
- Sturdy non-slip two-colour multi-component handle sleeves
- Precise adjustment (12 positions) by eccentric bolt
- High cutting performance with minimum effort due to optimum coordination of the cutting edge angle and transmission ratio
- Bolted cutter head, replaceable

General	
Part No.	71 72 460
EAN	4003773066750
Head	grey atramentized
Handles	with multi-component handles
Weight	2,100 g
Dimensions	460 x 119 x 34 mm
REACH compliant	does not contain SVHC
RoHS compliant	not applicable

Technical details	
HRC 19	Ø 8 mm
HRC 40	Ø 6 mm
HRC 48	Ø 5 mm
Cutting edge length mm	30 mm
Head thickness	33 mm

Technical changes and errors excepted

KNIPEX Quality – Made in Germany

KNIPEX Quality – Made in Germany

KNIPEX Quality – Made in Germany

Operating instructions

71 72 XXX

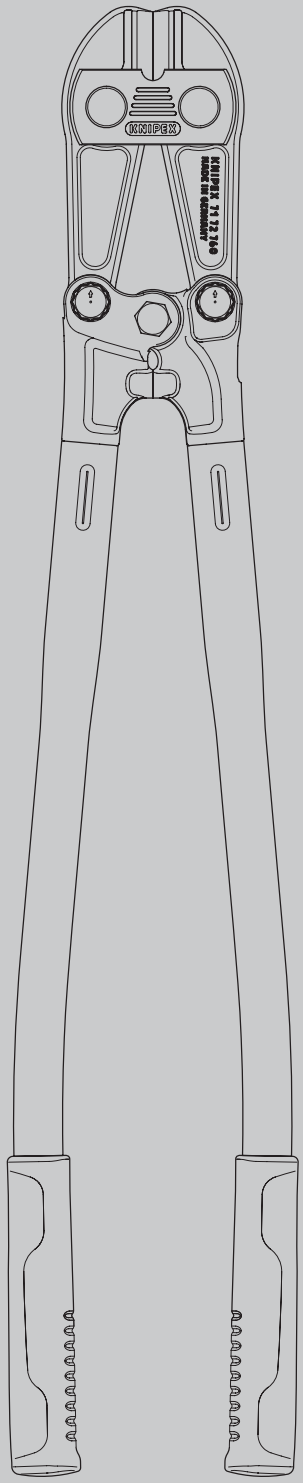

EN Bolt Cutters

for hard materials up to 48 HRC

CONTENTS

1	General	3
1.1	Notes on operating instructions	3
1.2	Symbols	3
1.3	Copyright	3
1.4	Guarantee and warranty	3
2	Safety	4
2.1	Intended use	4
3	Design and function	5
3.1	Design	5
3.2	Function	6
4	Operation	6
4.1	Cutting with the bolt cutter	6
5	Maintenance	7
5.1	Readjusting the cutting edges of the cutter head	7
5.2	Changing the cutter head	8
6	Technical data	9
6.1	Technical data	9
7	Dismantling and disposal	9

1 General

1.1 Notes on operating instructions

These operating instructions are designed to enable you to use your tool safely and efficiently.
The tool may only be used if it is in technically perfect condition.
As a consequence of technical developments, the illustrations and descriptions contained in these operating instructions may differ slightly from the tool actually delivered.
We do not accept any liability for damage caused by failure to observe these operating instructions.

1.2 Symbols

All safety instructions in these operating instructions are indicated by corresponding symbols. The signal words at the beginning of each safety instruction express the extent of the hazard.

Danger!
Level 1 risk source
This combination of symbol and signal word indicates an imminently hazardous situation that will result in death or serious injury if not avoided.

Warning!
Level 2 risk source
This combination of symbol and signal word indicates a possibly hazardous situation that may result in death or serious injury if not avoided.

Caution!
Level 3 risk source
This combination of symbol and signal word stands for important information that will assist in preventing damage to property or the environment.

1.3 Copyright

These operating instructions and all documentation supplied with this tool are protected by copyright and remain the property of KNIPEX.
The reprinting of these instructions, even in extract form, is only permitted with the written consent of C. Gustav Putsch KG.

1.4 Guarantee and warranty

The manufacturer grants a statutory warranty in accordance with the current sales and delivery conditions. No further warranties or assurances are granted.
Within the warranty period, the warranty covers the rectification of all defects that can be traced back to material faults or manufacturing errors.
Wearing parts are excluded from the warranty.
The repair or replacement of a tool shall not result in an extension of the warranty period. Tools shall only be repaired or replaced with "as new" parts, whose function corresponds to that of the old parts. All defective and hence replaced parts are the property of the manufacturer.

Warranty claims shall expire in particular if:

- Damage is caused through improper operation, use for purposes other than those specified by the manufacturer, or poor maintenance.
- Repairs or conversions are carried out by unauthorized persons.
- No original accessories or spare parts from KNIPEX are used.
- Defective components are not repaired immediately to minimise the extent of the damage and so as not to impair the safety of the tool (obligation to repair).

For the rest, reference is made to the liability and warranty regulations of the current sales and delivery conditions.

2 Safety

2.1 Intended use

The tool is intended for the following uses:

- Cutting/snipping hard materials up to a hardness of 48 HRC

Any use beyond the intended purpose or any unauthorized modification shall be considered improper. The operator shall be liable for damages resulting from improper use.

Intended use also includes adhering to these operating instructions. They must be read in full before use.

Warning!

Danger from sharp blades!

Handling sharp blades is dangerous. For this reason, make sure to handle your tools with care when working.

Warning!

Wear protective gloves, goggles and a hard hat!

Wear protective equipment when cutting / snipping hard materials to avoid the risk of injury from flying parts!

3 Design and function

3.1 Design

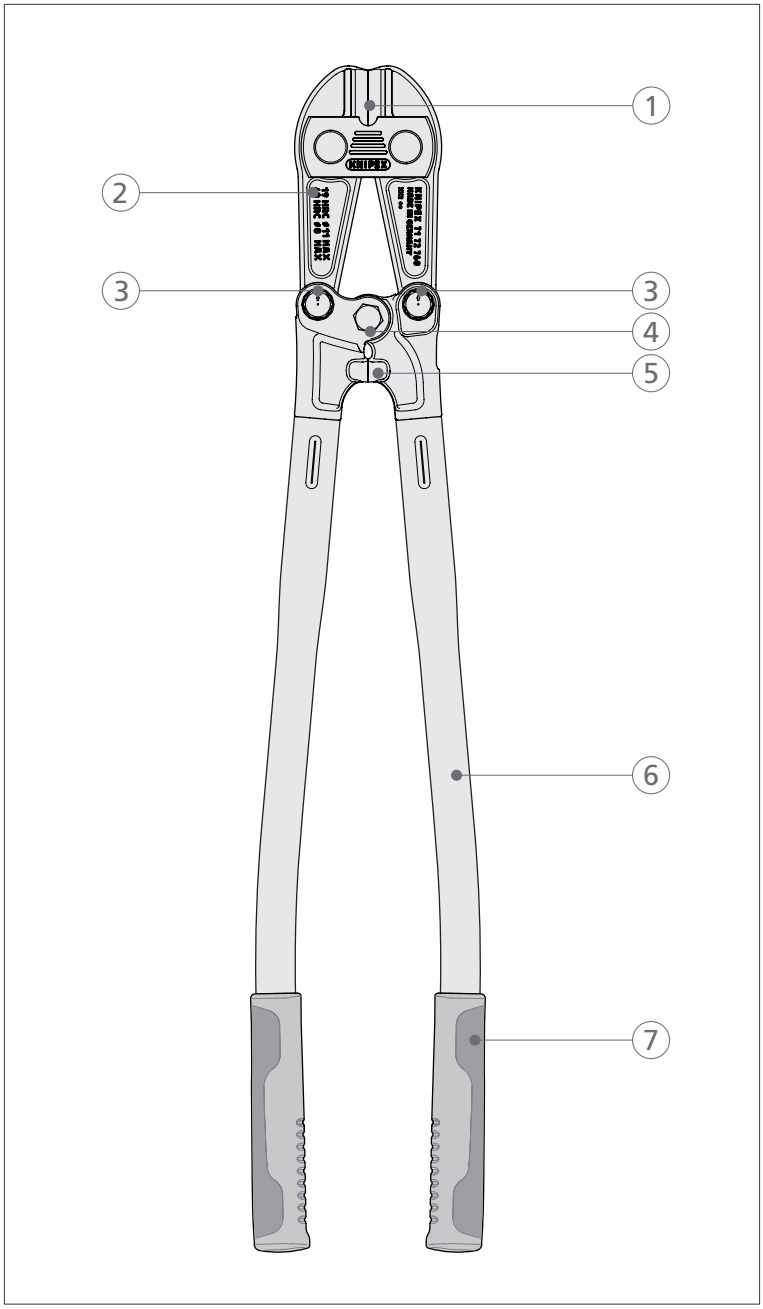

Design bolt cutter

1 Hardened cutting edges
2 Replaceable cutter head
3 Eccentric screws with nuts for precise setting and readjustment
4 Joint screw
5 Stop with damping insert
6 Ergonomically angled handles
7 Handles with grip sleeves

3.2 Function

The bolt cutter is used to cut/snip hard materials with a diameter of 5 to 13 mm (depending on the hardness and type of material to be cut).

4 Operation

4.1 Cutting with the bolt cutter

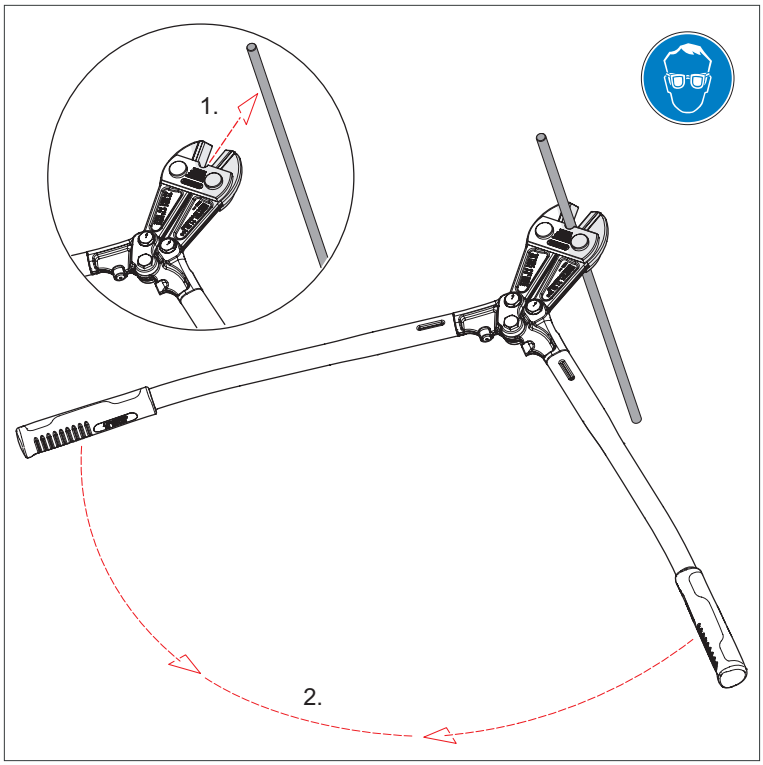

Cutting e.g. structural steel

1. Insert the material to be cut between the cutting edges of the bolt cutter, as close as possible to the joint.
2. Firmly press the two handles together.

In normal use with material that is not too soft / too hard, the preset gap between the cutting edges does not have to be changed.
However, you can set a smaller gap for very soft material (e.g. copper bars) or a larger gap for very hard material.
Note: Materials with a diameter of less than 2 mm cannot be cut.

5 Maintenance

5.1 Readjusting the cutting edges of the cutter head

The cutting edges of the bolt cutter have a preset gap of approx. 0.4 mm.
This gap does not need to be readjusted during normal use.
If there is high level of wear, it is possible to readjust the gap.

1. Loosen the two outer nuts.
2. Push the eccentric screws up a little.
3. Adjust the gap by turning the two eccentric screws. You can choose from 12 different positions.
   Note: The cutting edges must not be completely closed, otherwise they can break.

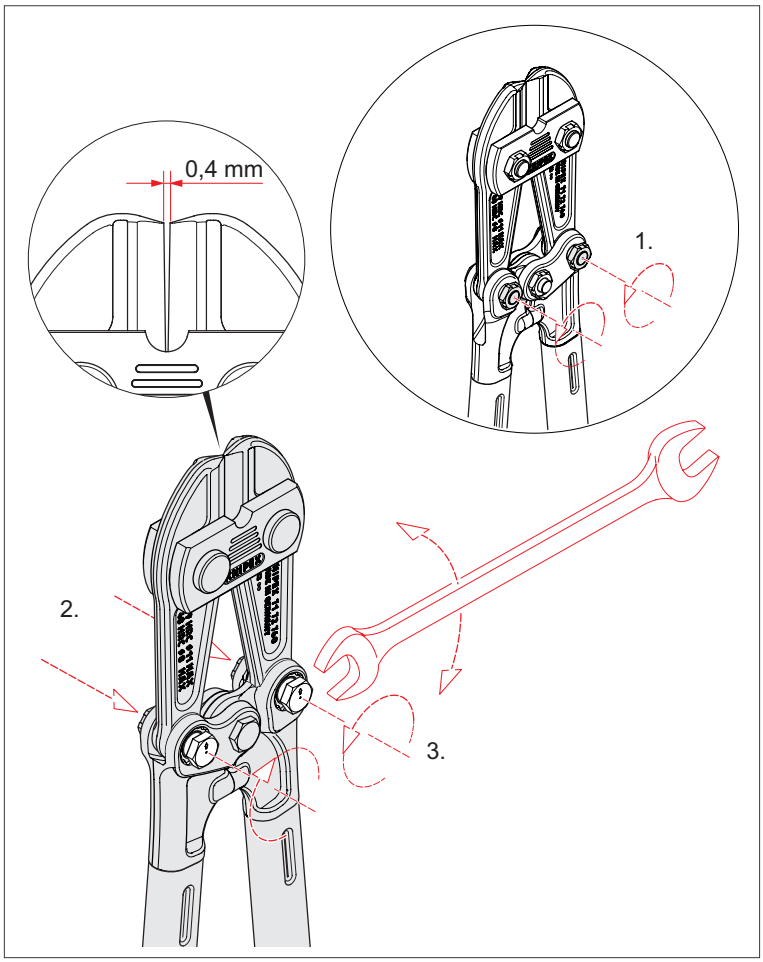

Adjusting the cutting edges of the cutter head

4. Push the eccentric screws back down.
5. Tighten the nuts again.
6. Secure the nuts with a gentle tap with a centre punch or with screw locking.

5.2 Changing the cutter head

The spare part numbers for the four different sizes can be found in the "Technical data" chapter.

1. Loosen the three nuts completely.
2. Remove the three screws.
3. Pull the old cutter head out of its holder.
4. Pull the handles apart.
5. Clean and lightly oil all joints.

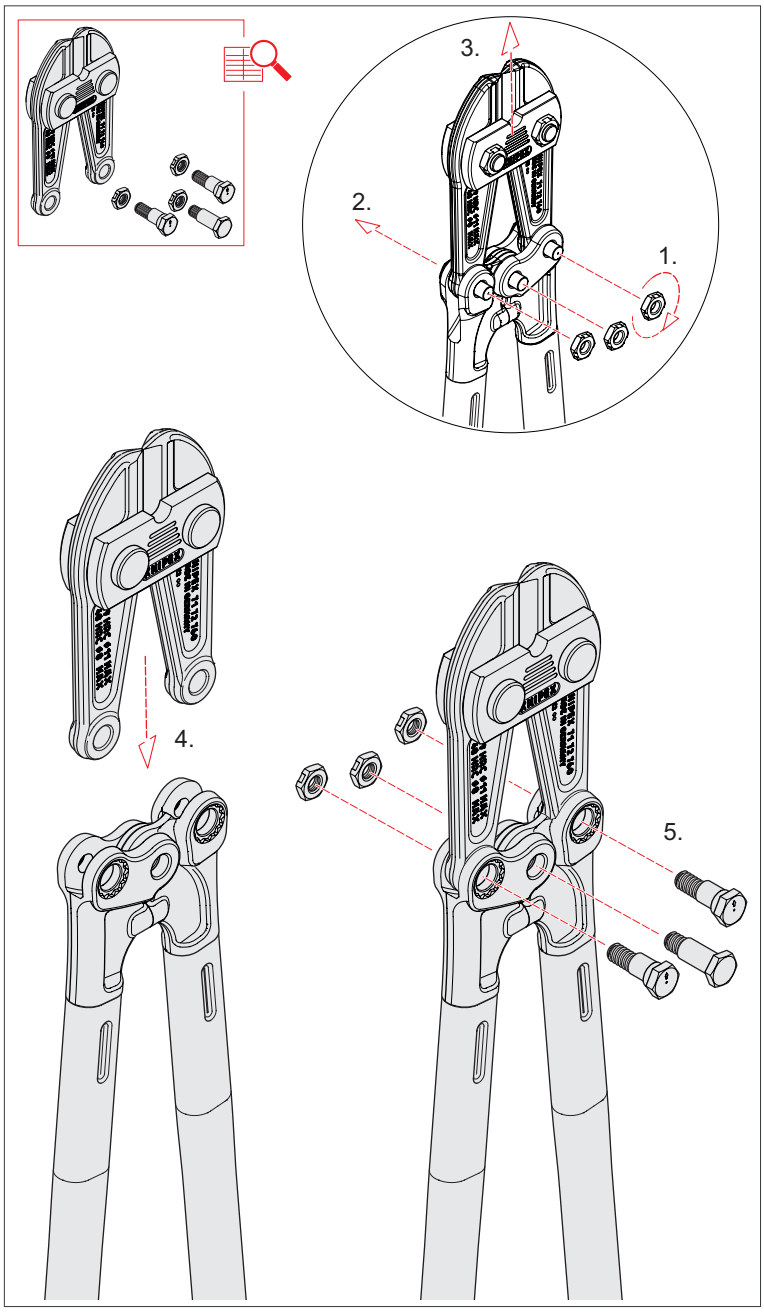

Replacing the cutter head

6. Reattach the handles to the joint screw and tighten the nut slightly.
7. Push the new cutter head into the holder.
8. Fasten it with the two eccentric screws and nuts.
9. Secure the nuts with a gentle tap with a centre punch or with screw locking.

6 Technical data

6.1 Technical data

The KNIPEX bolt cutters of the 71 72 xxx series come in four different sizes.

Technical data	Unit	71 72 460	71 72 610	71 72 760	71 72 910
Length	mm	460	610	760	910
Weight approx.	g	2100	2550	4250	4950
Cutting capacities for HRC 19	Ø mm	8	9	11	13
Cutting capacities for HRC 40	Ø mm	6	8	9	10
Cutting capacities for HRC 48	Ø mm	5	7	8	9
Article number spare cutter head (with screws)	–	71 79 460	71 79 610	71 79 760	71 79 910

7 Dismantling and disposal

Ensure that the dismantled parts of the tool are properly recycled.

KNIPEX-Werk
C. Gustav Putsch KG

42337 Wuppertal

Tel.: +49 202 – 47 94-0
Fax: +49 202 – 47 74 94

info@knipex.com
www.knipex.com